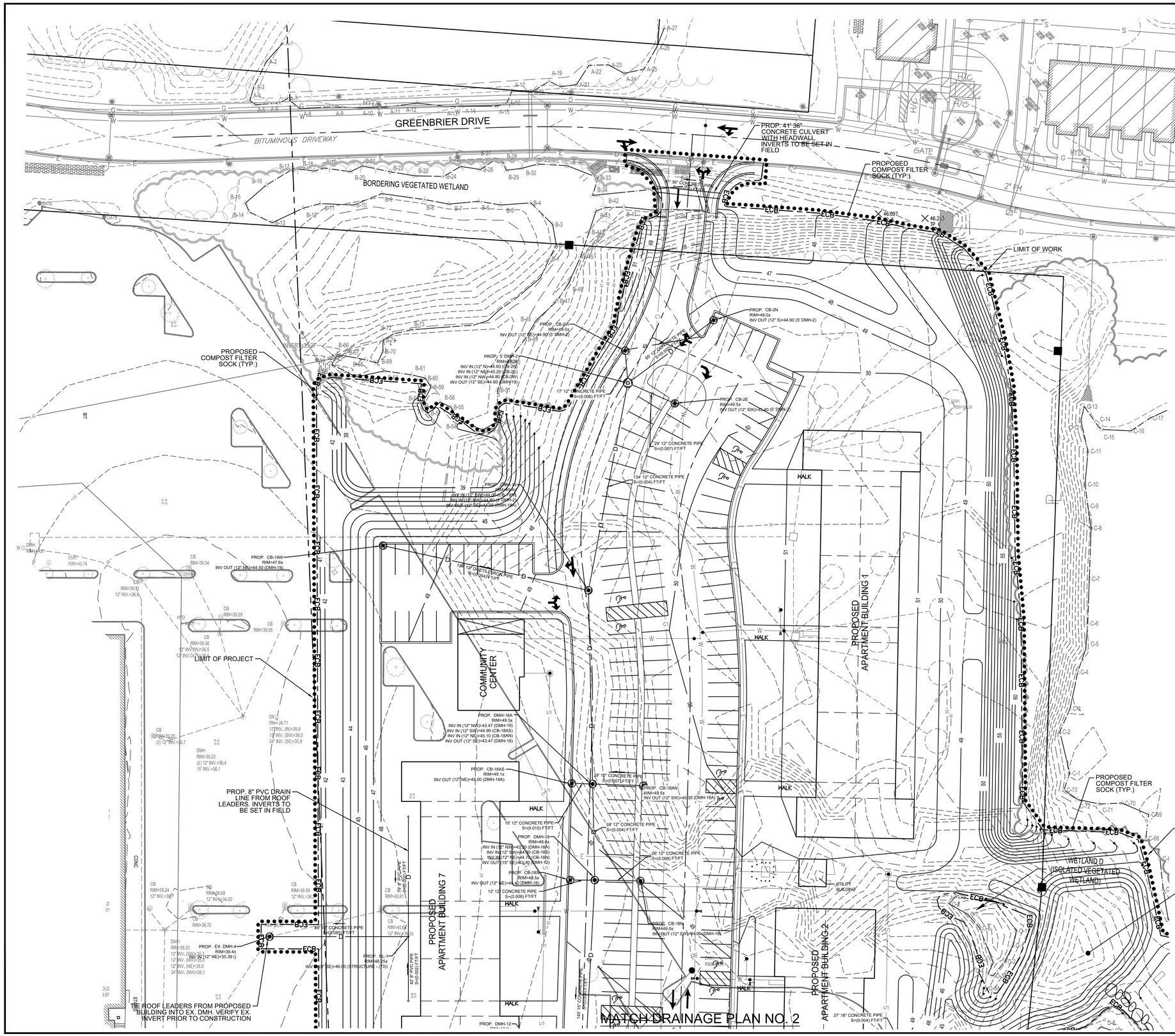

NOTES:

1. UNDERGROUND UTILITIES DEPICTED HEREON ARE TO BE CONSIDERED APPROXIMATE. ALL UNDERGROUND UTILITIES ARE NOT SHOWN ON THIS MAP.
2. SITE GRADING AND UTILITIES DESIGNED BY CAPUTO AND WICK LTD.
3. STORMWATER DRAINAGE DESIGNED BY BETA GROUP, INC.

LEGEND:

	TREELINE
	PROPERTY LINE
700	EXISTING CONTOUR
700	PROPOSED CONTOUR
E	UNDERGROUND ELECTRI/ /TELEPHONE/CATV
FS	FIRE SUPPLY
W	DOMESTIC WATER
D	DRAIN
FM	SANITARY SEWER FORCE MAIN
S	SANITARY SEWER
G	GAS
//	OVERHEAD WIRES
	PEDESTRIAN ROUTES
ECB	EROSION CONTROL AND LIMIT OF WORK

DRAINAGE PLAN NO. 1

Caputo & Wick LTD.
1150 Pawtucket Avenue
Rumford, RI 02916-1897
(401) 434-8880 Office
(401) 434-1615 Fax
www.cwltd.net
CIVIL ENGINEERING • SURVEYING
TRANSPORTATION • ENVIRONMENTAL

BETA
www.BETA-Inc.com

DATE:	6/4/2020
SCALE:	1" = 30'-0"
DRAWN BY:	
PROJECT #	11/06/2020

AJA architects
AJA GROUP, INC.
(781) 935-2500

GREENBRIER II
RI SEEKONK HOLDINGS LLC

AJA ARCHITECTS
16 MASON AVE SUITE 5
NORTH ATTLEBORO, MA 02760

C-201.1

SHEET 3.4 OF 21

PERMITTING SET - FOR REVIEW ONLY - JUNE 4, 2021

\\CWSRV02\projects\Massachusetts\Seekonk\FallRiverAve\2018070.00 MA Seekonk FRA Greenbrier-Showcase\11-40B\2018070 MA Seekonk FRA Greenbrier II -Prelim Site Plan Set.dwg

MATCH DRAINAGE PLAN NO. 1

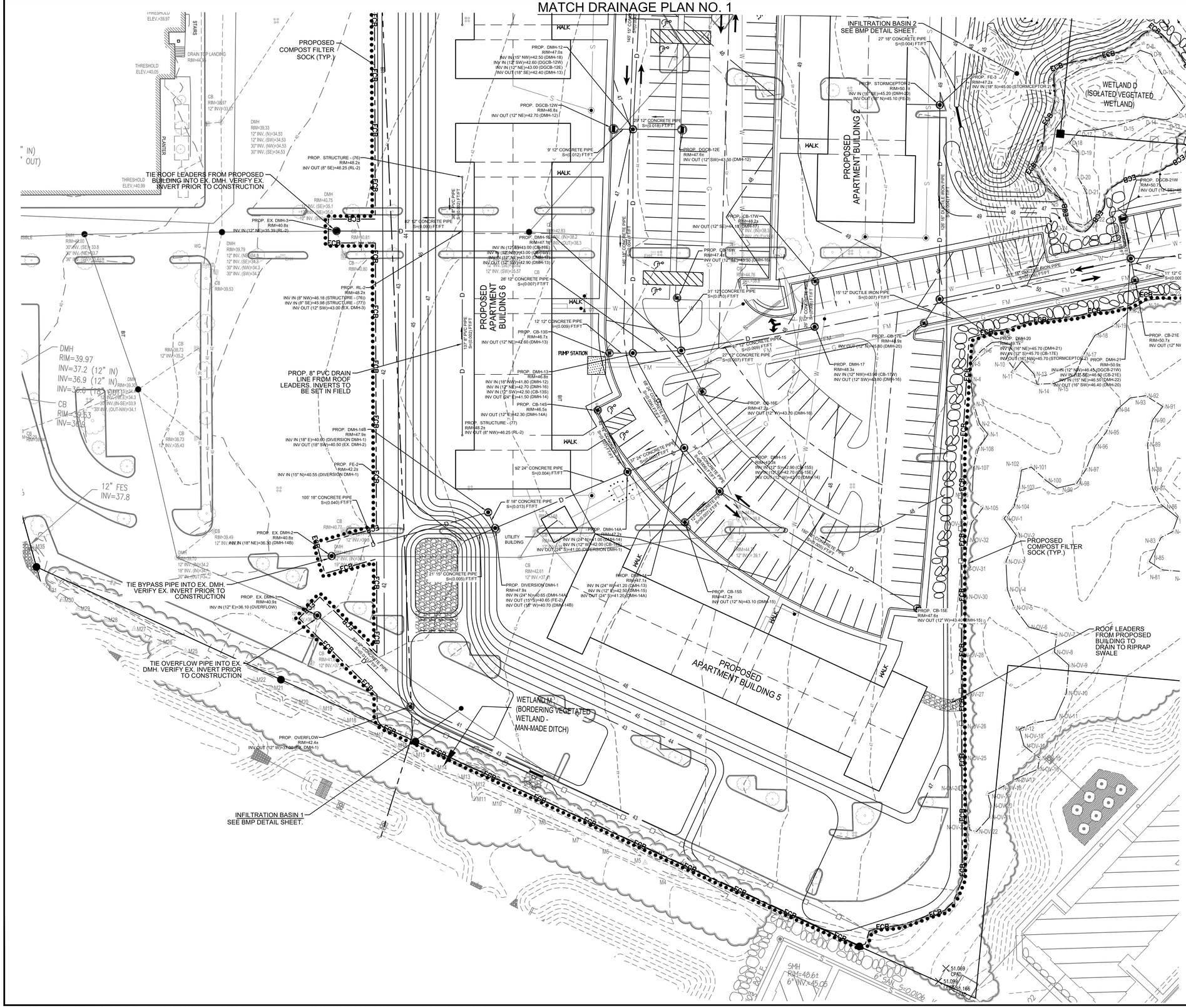

MATCH DRAINAGE PLAN NO. 3

N.

SCALE: 1"=30'
SCALE IN FEET

NOTES:

1. UNDERGROUND UTILITIES DEPICTED HEREON ARE TO BE CONSIDERED APPROXIMATE. ALL UNDERGROUND UTILITIES ARE NOT SHOWN ON THIS MAP.
2. SITE GRADING AND UTILITIES DESIGNED BY CAPUTO AND WICK LTD.
3. STORMWATER DRAINAGE DESIGNED BY BETA GROUP, INC.

DRAINAGE PLAN NO. 2

Caputo & Wick LTD
CIVIL ENGINEERING • SURVEYING
TRANSPORTATION • ENVIRONMENTAL
1150 Pawtucket Avenue
Rumford, RI 02916-1897
(401) 434-8880 Office
(401) 434-1615 Fax
www.cwltd.net

BETA
www.BETA-Inc.com

DATE:	6/4/2020
SCALE:	1" = 30'-0"
DRAWN BY:	

AJA architects

PROJECT # 11/06/2020

AJA GROUP, INC.
(781) 935-2500

GREENBRIER II
RI SEEKONK HOLDINGS LLC

AJA ARCHITECTS
16 MASON AVE SUITE 5
NORTH ATTLEBORO, MA 02760

C-201.2

SHEET 3.5 OF 21

PERMITTING SET - FOR REVIEW ONLY - JUNE 5, 2021

\\CWSRV02\projects\Massachusetts\Seekonk\FallRiverAve\2018070.00 MA Seekonk FRA Greenbrier-Showcase\11-40B\2018070 MA Seekonk FRA Greenbrier II -Prelim Site Plan Set.dwg

MATCH DRAINAGE PLAN NO. 2

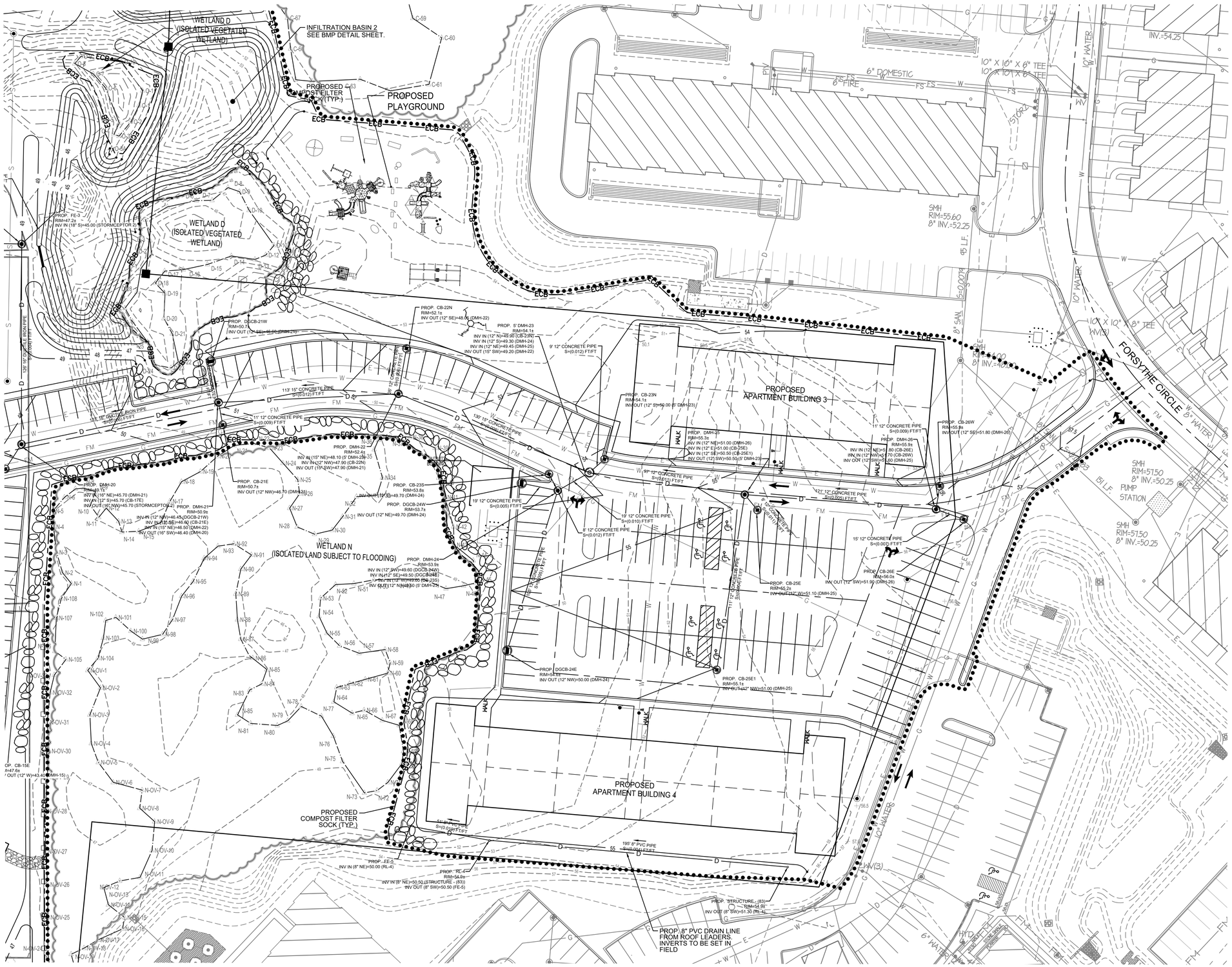

DRAINAGE PLAN NO. 3

N.

SCALE: 1"=30'
SCALE IN FEET

NOTES:

1. UNDERGROUND UTILITIES DEPICTED HEREON ARE TO BE CONSIDERED APPROXIMATE. ALL UNDERGROUND UTILITIES ARE NOT SHOWN ON THIS MAP.
2. SITE GRADING AND UTILITIES DESIGNED BY CAPUTO AND WICK LTD.
3. STORMWATER DRAINAGE DESIGNED BY BETA GROUP, INC.

Caputo & Wick LTD.
1150 Pawtucket Avenue
Rumford, RI 02916-1897
(401) 434-8880 Office
(401) 434-1615 Fax
www.cwltd.net
CIVIL ENGINEERING • SURVEYING
TRANSPORTATION • ENVIRONMENTAL

BETA
www.BETA-Inc.com

DATE:	6/4/2020
SCALE:	1" = 30'-0"
DRAWN BY:	

AJA architects
PROJECT # 11/06/2020

AJA GROUP, INC.
(781) 935-2500

GREENBRIER II
RI SEEKONK HOLDINGS LLC

AJA ARCHITECTS
16 MASON AVE SUITE 5
NORTH ATTLEBORO, MA 02760

C-201.3

SHEET 3.6 OF 21

PERMITTING SET - FOR REVIEW ONLY - JUNE 4, 2021

\\CWSRV02\projects\Massachusetts\Seekonk\FallRiverAve\2018070.00 MA Seekonk FRA Greenbrier-Showcase\11-40B\2018070 MA Seekonk FRA Greenbrier II -Prelim Site Plan Set.dwg

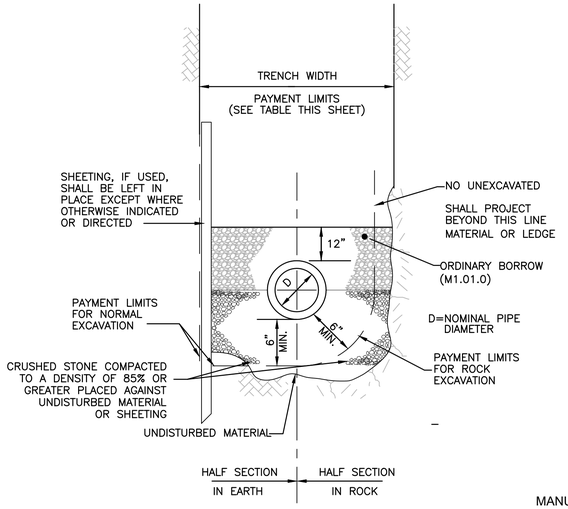

DRAIN TRENCH SECTION

MAXIMUM PAYMENT LIMITS			
DIAMETER OF PIPE D IN INCHES	TRENCH WIDTH IN FEET	TEMPORARY PAVEMENT IN FEET	
		TRENCH DEPTH	
		< OR = 10'	> 10'
12 AND SMALLER	6.00	7.00	8.00
15	6.25	7.25	8.25
18	6.50	7.50	8.50
21	6.75	7.75	8.75
24	7.00	8.00	9.00
27	7.25	8.25	9.25
30	7.50	8.50	9.50
36	8.00	9.00	10.00
42	8.50	9.50	10.50
48	9.00	10.00	11.00
54	9.50	10.50	11.50

CLASS B ROCK EXCAVATION

MAXIMUM PAYMENT LIMITS	
DIAMETER OF PIPE D IN INCHES	TRENCH WIDTH IN INCHES
12 AND SMALLER	28.00
15	31.00
18	34.00
24	40.00

*NOTE: MAXIMUM 6" ROCK EXCAVATION BELOW PIPE.

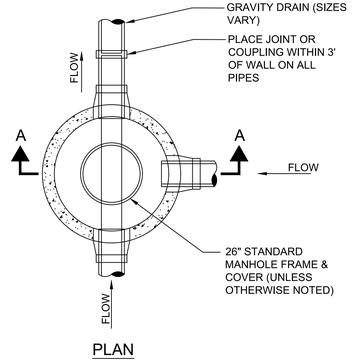

PLAN

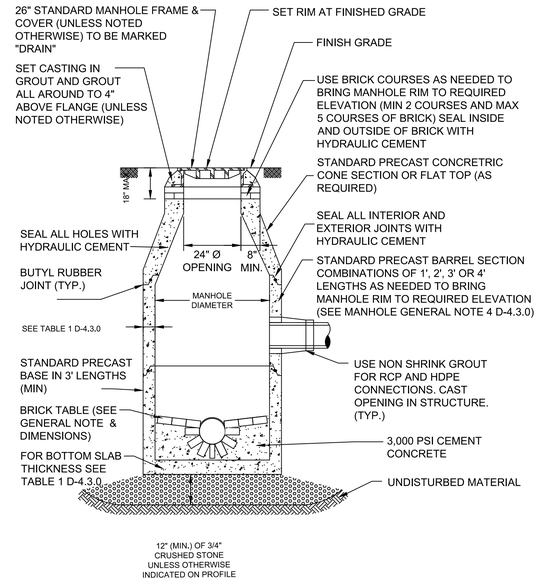

SECTION A-A

TYPICAL DRAIN MANHOLE

NOT TO SCALE

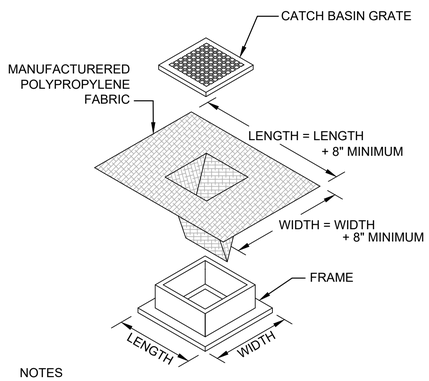

NOTES

1. LENGTH AND WIDTH OF POLYPROPYLENE FABRIC MUST EXCEED EXISTING CATCH BASIN FRAME DIMENSIONS BY A MINIMUM OF 8".
2. REMOVE CATCH BASIN GRATE AND INSTALL POLYPROPYLENE FABRIC OVER CATCH BASIN FRAME. REPLACE CATCH BASIN GRATE TO SECURE POLYPROPYLENE FABRIC IN PLACE.
3. CATCH BASIN EROSION CONTROL TO BE PLACED AT ALL CATCH BASIN WITHIN PROJECT LIMITS.

TYPICAL CATCH BASIN EROSION CONTROL PROTECTION

NOT TO SCALE

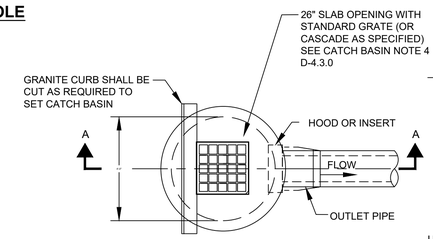

PLAN

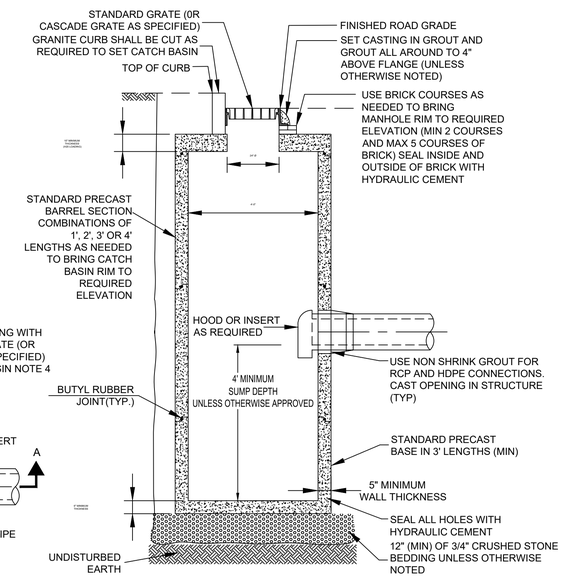

SECTION A-A

TYPICAL CATCH BASIN

NOT TO SCALE

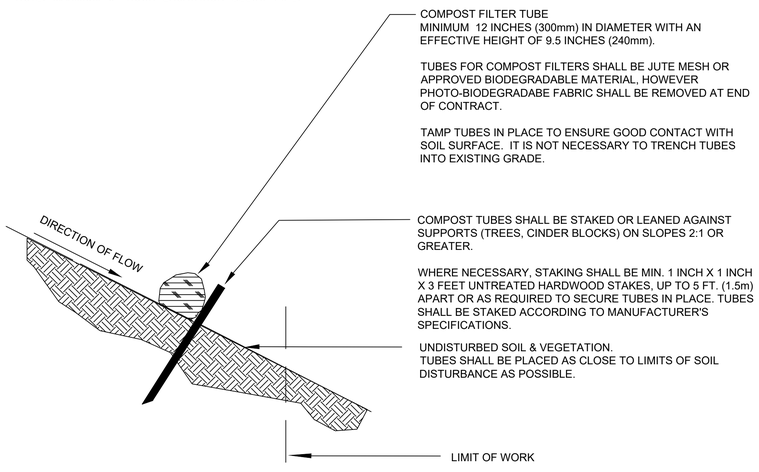

SEDIMENT CONTROL BARRIER

NOT TO SCALE

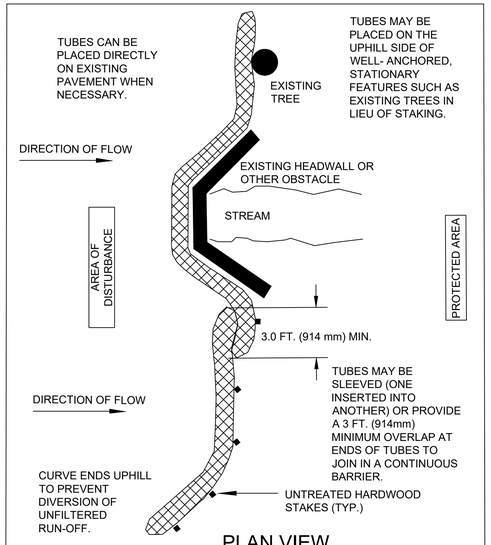

PLAN VIEW

GENERAL NOTES:

1. PROVIDE A MINIMUM TUBE DIAMETER OF 12 INCHES (300mm) FOR SLOPES UP TO 50 FEET (15.24m) IN LENGTH WITH A SLOPE RATIO OF 3H:1V OR STEEPER. LONGER SLOPES OF 3H:1V MAY REQUIRE LARGER TUBE DIAMETER OR ADDITIONAL COURSING OF FILTER TUBES TO CREATE A FILTER BERM. REFER TO MANUFACTURER'S RECOMMENDATIONS FOR SITUATIONS WITH LONGER OR STEEPER SLOPES.
2. INSTALL TUBES ALONG CONTOURS AND PERPENDICULAR TO SHEET OR CONCENTRATED FLOW.
3. TUBE LOCATION MAY BE SHIFTED TO ADJUST TO LANDSCAPE FEATURES, BUT SHALL PROTECT UNDISTURBED AREA AND VEGETATION TO MAXIMUM EXTENT POSSIBLE.
4. DO NOT INSTALL IN PERENNIAL, EPHEMERAL OR INTERMITTENT STREAMS.
5. ADDITIONAL TUBES SHALL BE USED AT THE DIRECTION OF THE ENGINEER.
6. ADDITIONAL STAKING SHALL BE USED AT THE DIRECTION OF THE ENGINEER.

20150226_MassDOT_rev7

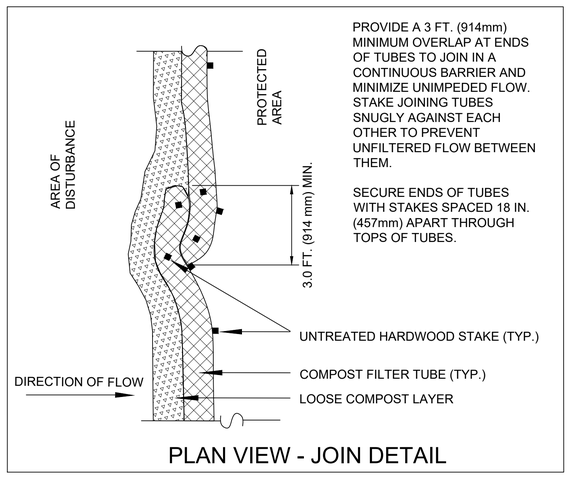

PLAN VIEW - JOIN DETAIL

DRAINAGE DETAIL NO. 1

1150 Pawtucket Avenue
Rumford, RI 02916-1897
(401) 434-8880 Office
(401) 434-1615 Fax
www.cwltd.net

Caputo & Wick LTD
CIVIL ENGINEERING • SURVEYING
TRANSPORTATION • ENVIRONMENTAL

BETA
www.BETA-Inc.com

DATE:	6/4/2020
SCALE:	
DRAWN BY:	
PROJECT #	11/06/2020

AJA architects
AJA GROUP, INC.
(781) 935-2500

GREENBRIER II
RI SEEKONK HOLDINGS LLC
AJA ARCHITECTS
16 MASON AVE SUITE 5
NORTH ATTLEBORO, MA 02760

C-801

SHEET 8.1 OF 21

PERMITTING SET - FOR REVIEW ONLY - JUNE 4, 2021

\\CWSRV02\projects\Massachusetts\Seekonk\FallRiverAve\2018070.00 MA Seekonk FRA Greenbrier-Showcase\11-40B\2018070.00 MA Seekonk FRA Greenbrier-Showcase - Ch40B Drainage Details.dwg

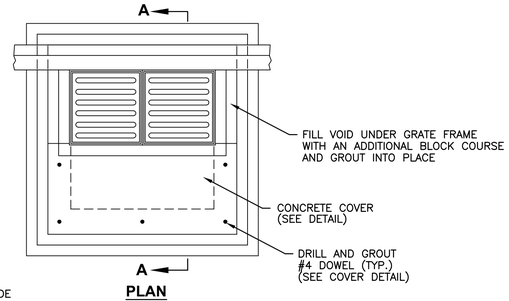

PLAN

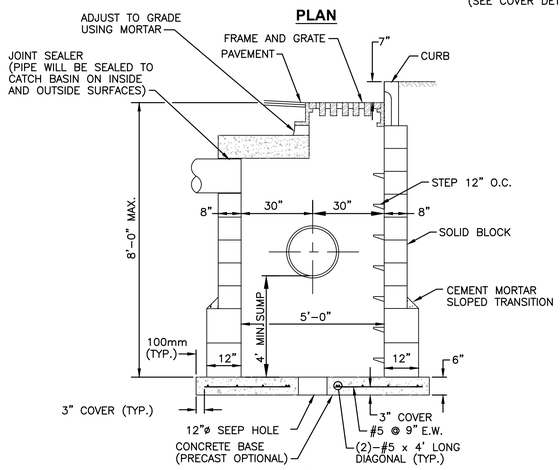

SECTION A-A

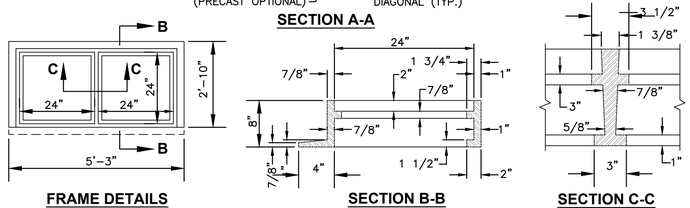

FRAME DETAILS **SECTION B-B** **SECTION C-C**

NOTES:

1. 1/2" CEMENT MORTAR COAT REQUIRED ON ALL INSIDE AND OUTSIDE SURFACES.
2. 8" HIGH FRAME MAY BE SUBSTITUTED WITH A 4" HIGH FRAME AS NEEDED. SHOP DRAWINGS ARE REQUIRED.
3. ADJUST DOWEL LOCATION BASED ON PIPE CONFIGURATION, IF REQUIRED.
4. PIPE COVER FOR THIS DETAIL SHALL BE 1'-6" TO 3'-0"
5. USE 8" WALLS UP TO 6'-0" DEPTH, USE 1'-0" WALLS UP TO 8'-0" DEPTH.
6. TWO SINGLE FRAMES WITH THREE FLANGES AND TWIN GRATES MAY BE SUBSTITUTED FOR THE DOUBLE FRAME WITH TWIN GRATES.

DOUBLE GRATE CATCH BASIN

NOT TO SCALE

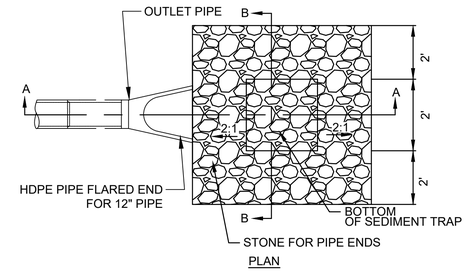

PLAN

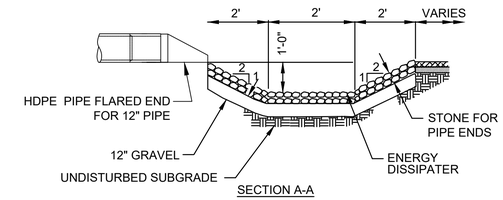

SECTION A-A

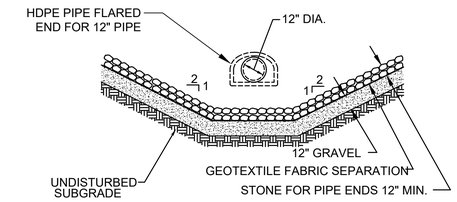

SECTION B-B

OUTLET SEDIMENT TRAP

NOT TO SCALE

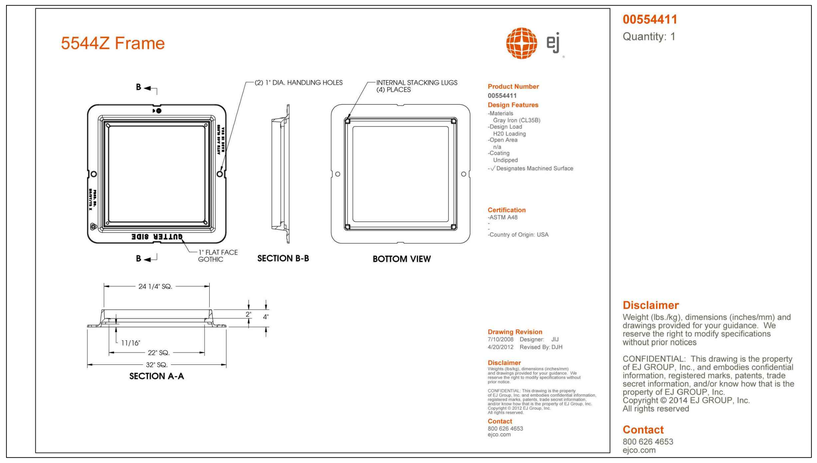

TYPICAL 4-INCH FRAME DETAIL

NOT TO SCALE

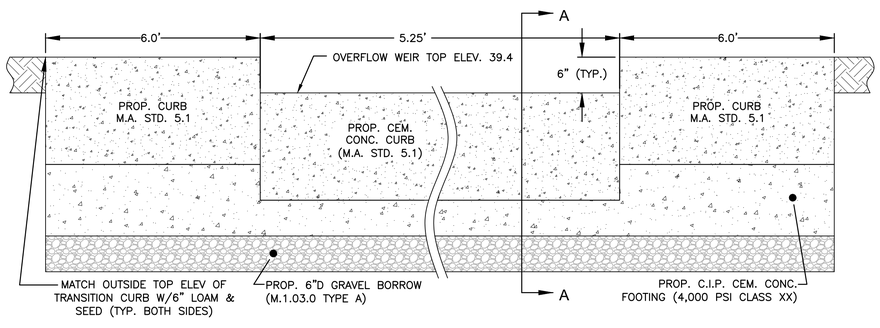

CONCRETE CURB OVERFLOW WEIR DETAIL

NOT TO SCALE

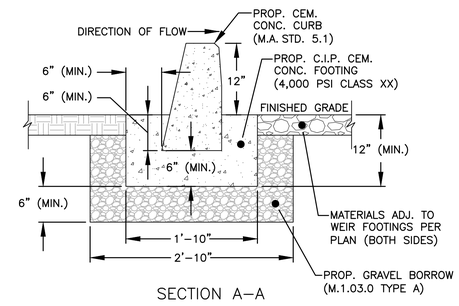

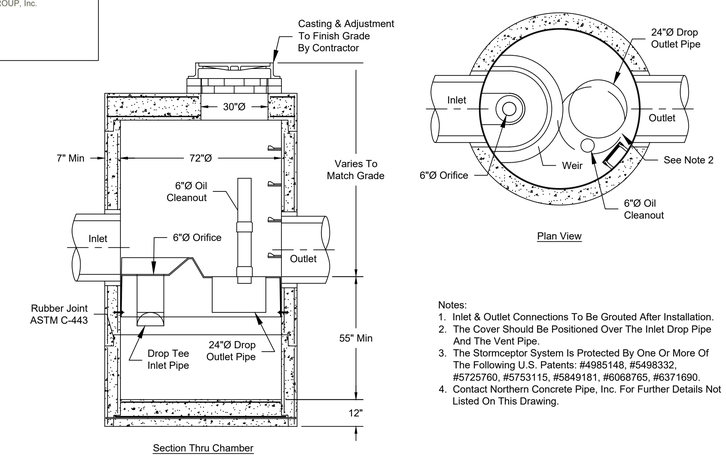

Notes:

1. Inlet & Outlet Connections To Be Grouted After Installation.
2. The Cover Should Be Positioned Over The Inlet Drop Pipe And The Vent Pipe.
3. The Stormceptor System Is Protected By One Or More Of The Following U.S. Patents: #4985148, #5498332, #5725760, #5753115, #5849181, #6068765, #6371690.
4. Contact Northern Concrete Pipe, Inc. For Further Details Not Listed On This Drawing.

TYPICAL PRECAST STORMCEPTOR STC 900

NOT TO SCALE

DRAINAGE DETAIL NO. 2

1150 Pawtucket Avenue
Rumford, RI 02916-1897
(401) 434-8880 Office
(401) 434-1615 Fax
www.cwltd.net
Caputo & Wick LTD
CIVIL ENGINEERING • SURVEYING
TRANSPORTATION • ENVIRONMENTAL
BETA
www.BETA-Inc.com

DATE: 6/4/2020

SCALE:

DRAWN BY:

AJA architects

PROJECT # 11/06/2020

AJA GROUP, INC.
(781) 935-2500

GREENBRIER II
RI SEEKONK HOLDINGS LLC

AJA ARCHITECTS
16 MASON AVE SUITE 5
NORTH ATTLEBORO, MA 02760

C-802

SHEET 8.2 OF 21

PERMITTING SET - FOR REVIEW ONLY - JUNE 4, 2021

\\CWSRV02\projects\Massachusetts\Seekonk\FallRiverAve\2018070.00 MA Seekonk FRA Greenbrier-Showcase\11-40B\2018070.00 MA Seekonk FRA Greenbrier-Showcase - Ch40B Drainage Details.dwg

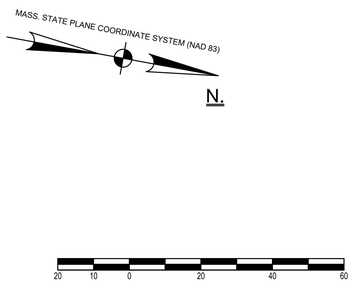

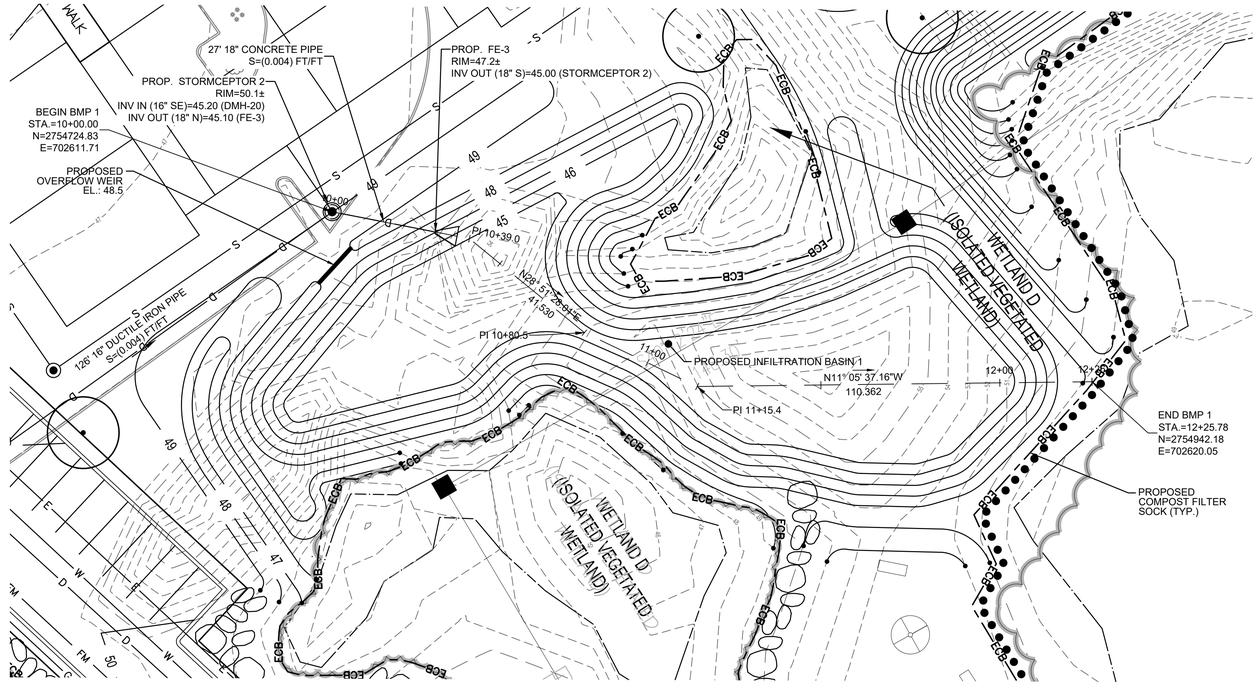

PLAN: INFILTRATION BASIN 1

BMP 1
STA 10+00 TO STA 12+25.78

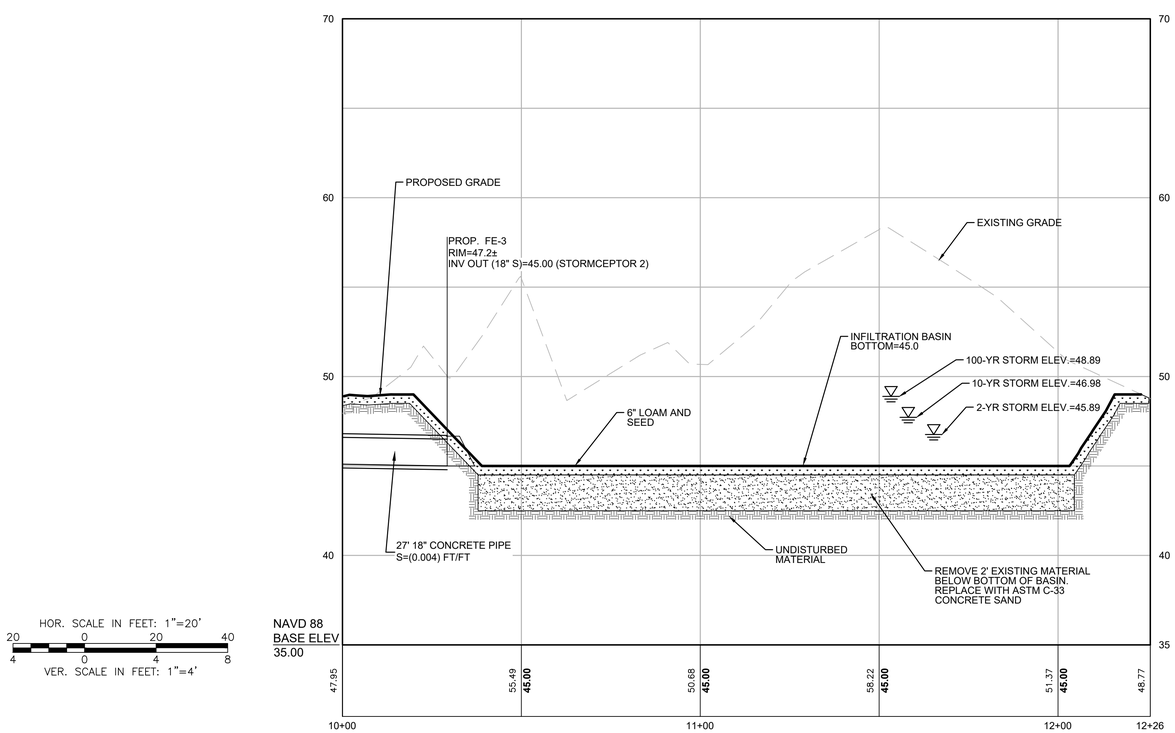

PROFILE: INFILTRATION BASIN 1

INFILTRATION BASIN 1

AVAILABLE STORAGE VOLUME: 39,663 CF (BELOW ELEV 49.00)

WQ STORAGE AVAILABLE IN BMP:
36,356 CF

WQV. PROVIDED: 36,356 CF

PEAK INFLOW RATES:
- 2-YEAR: 3.82 CFS
- 10-YEAR: 8.15 CFS
- 100-YEAR: 19.47 CFS

PEAK OUTFLOW RATES (VIA CONCRETE OVERFLOW WEIR):
- 2-YEAR: 0 CFS
- 10-YEAR: 0 CFS
- 100-YEAR: 2.25 CFS

BMP PLAN NO. 1

1150 Pawtucket Avenue
Rumford, RI 02916-1897
(401) 434-8880 Office
(401) 434-1615 Fax
www.cwltd.net
Caputo & Wick LTD
CIVIL ENGINEERING • SURVEYING
TRANSPORTATION • ENVIRONMENTAL
BETA
www.BETA-Inc.com

DATE: 6/4/2020
SCALE:
DRAWN BY:

AJA architects
PROJECT # 11/06/2020
AJA GROUP, INC.
(781) 935-2500

GREENBRIER II
RI SEEKONK HOLDINGS LLC
AJA ARCHITECTS
16 MASON AVE SUITE 5
NORTH ATTLEBORO, MA 02760

C-901

SHEET 9.1 OF 21

PERMITTING SET - FOR REVIEW ONLY - JUNE 4, 2021

\\CWSRV02\projects\Massachusetts\Seekonk\FallRiverAve\2018070.00 MA Seekonk FRA Greenbrier-Showcase\11-40B\2018070.00 MA Seekonk FRA Greenbrier-Showcase - Ch40B BMP Detail Plans.dwg

BMP 2
STA 10+00 TO STA 16+00.00

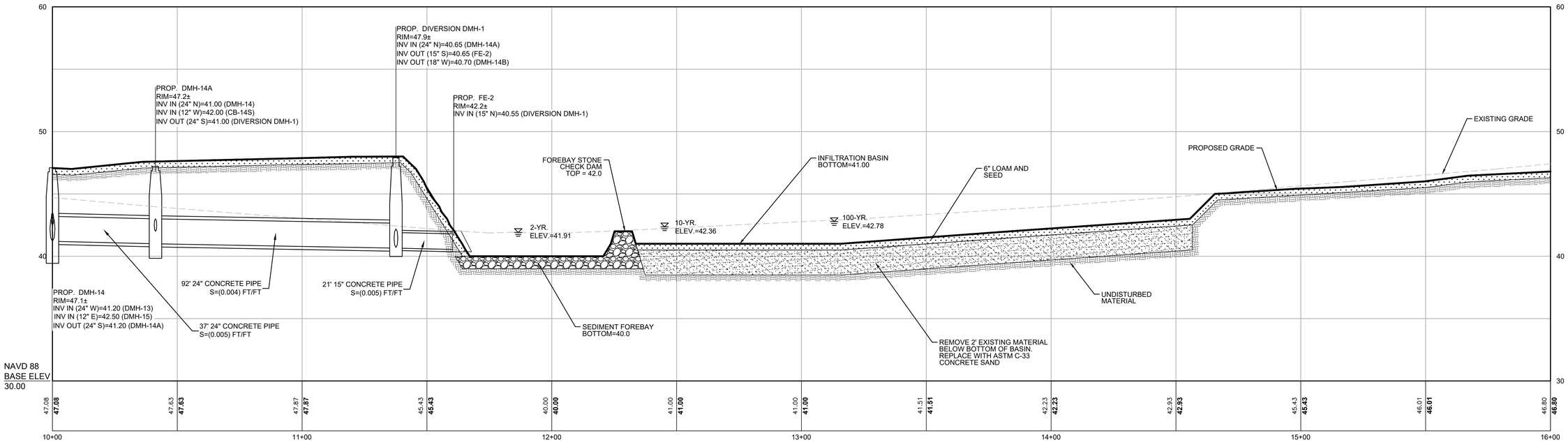

HOR. SCALE IN FEET: 1"=20'

VER. SCALE IN FEET: 1"=4'

PROFILE: INFILTRATION BASIN 2

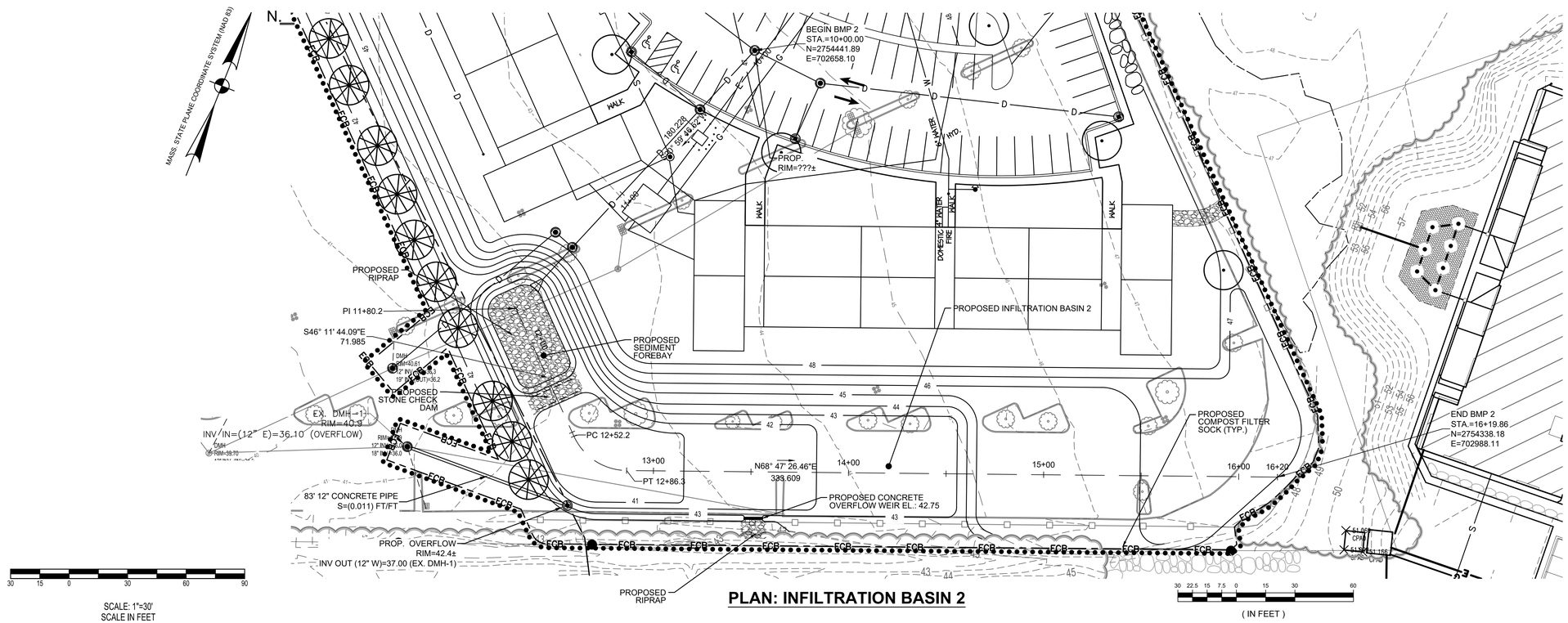

SCALE: 1"=30'
SCALE IN FEET

PLAN: INFILTRATION BASIN 2

(IN FEET)
1 inch = 30 ft.

INFILTRATION BASIN 2

AVAILABLE STORAGE VOLUME: 22,400 CF (BELOW ELEV 43.00)

WQ STORAGE AVAILABLE IN BMP:
16,377 CF

WQV. PROVIDED: 16,377 CF

PEAK INFLOW RATES:
- 2-YEAR: 4.46 CFS
- 10-YEAR: 6.20 CFS
- 25-YEAR: 7.22 CFS
- 100-YEAR: 11.14 CFS

PEAK OUTFLOW RATES (VIA 12" RCP OVERFLOW PIPE):
- 2-YEAR: 0.0 CFS
- 10-YEAR: 0.0 CFS
- 25-YEAR: 1.14 CFS
- 100-YEAR: 6.41 CFS

BMP PLAN NO. 2

1150 Pawtucket Avenue
Rumford, RI 02916-1897
(401) 434-8880 Office
(401) 434-1615 Fax
www.cwltd.net

Caputo & Wick LTD
CIVIL ENGINEERING • SURVEYING
TRANSPORTATION • ENVIRONMENTAL

BETA
www.BETA-Inc.com

DATE: 6/4/2020
SCALE:
DRAWN BY:

AJA architects
PROJECT # 11/06/2020

AJA GROUP, INC.
(781) 935-2500

GREENBRIER II
RI SEEKONK HOLDINGS LLC
AJA ARCHITECTS
16 MASON AVE SUITE 5
NORTH ATTLEBORO, MA 02760

C-902

SHEET 9.2 OF 21

PERMITTING SET - FOR REVIEW ONLY - JUNE 4, 2021

\\CWSRV02\projects\Massachusetts\Seekonk\FallRiverAve\2018070.00 MA Seekonk FRA Greenbrier-Showcase\11-40B\2018070.00 MA Seekonk FRA Greenbrier-Showcase - Ch40B BMP Detail Plans.dwg